ALL DIAMETERS TO BE CONCENTRIC WITHIN .006 TIR U.O.S.

REV	CHANGE	DATE	OK'D

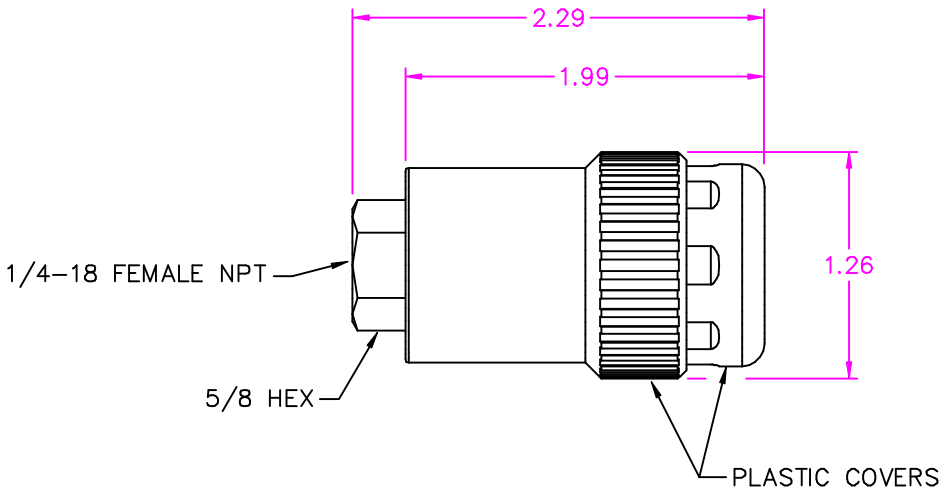

TOLERANCES U.O.S. DECIMALS .XXX ±.005 ANGLES ±1/2°	FINISH
MATERIAL	HEAT TREAT

FOSTER MANUFACTURING COMPANY, INC.
2324 W. BATTLEFIELD ROAD SPRINGFIELD, MISSOURI

TITLE	DATE
SVPC3003 PROFILE DRAWING	4–6–12
	DRAWING NUMBER

SURFACE FINISHES 90 Ra MAX U.O.S. | THEORETICAL WEIGHT

THE INFORMATION DISCLOSED IN THIS DOCUMENT IS PROPRIETARY TO FOSTER MFG. CO. AND MAY NOT BE USED FOR MANUFACTURE OR ANY OTHER PURPOSE WITHOUT THE WRITTEN CONSENT OF FOSTER MFG. CO.

OFFICE COPY